DISCRETE MANUFACTURING & PROCESS INDUSTRIES

Solutions

PRODUCT RANGE

Bonfiglioli

We engineer dreams

DISCRETE MANUFACTURING & PROCESS INDUSTRIES

Industrial Gearboxes
A series
C series
F series
S series
VF W series
VF-EP/W-EP series
300M Series
3/H series
HDO series
HDP series
HDPE series

Electric Motors
BN/M series
BE/ME series
BX/MX series
BX Heavy Duty Series
BSR series

MEET OUR CUSTOMERS' NEEDS

WORLDWIDE DISTRIBUTION NETWORK

IMPROVE APPLICATION PERFORMANCE

A One-Stop shop for all your industrial applications

Every year, Bonfiglioli manufactures over 1.5 million products offering its customers fully integrated and solutions, ideal for a wide range of applications in over twenty industrial sectors.

The Discrete Manufacturing & Process Industries business unit offers gearboxes, geared motors and electric motors for any industrial applications. From fractional power to a few hundred Kw, our experts are able to address the most sophisticated requests for applications working in all conditions.

Thanks to over 60 years of experience by our customers'side, today we are able to anticipate their needs in more than twenty different industries, focusing on industrial processes and discrete manufacturing machineries such as packaging, food & beverage, mining, logistics and intralogistics.

Bonfiglioli also provides solutions for:

- ELECTROMOBILITY
- MOTION & ROBOTICS
- MOBILE
- WIND

www.bonfiglioli.com

ALWAYS BY OUR CUSTOMER'S SIDE, ALL OVER THE WORLD

Our worldwide reach always puts us where our customers need us. We believe that deep understanding of application requirements — both technical and environmental — make the difference in providing the right products in a timely manner.

LEAN MANUFACTURING

INDUSTRY 4.0

FAST DELIVERY TIMES

WORLDWIDE PRESENCE

Bonfiglioli has globalized production over the years. Today, we operate 14 manufacturing plants around the world to serve customers in local markets more effectively. Our plants in Italy, Germany, USA, Brazil, India, China, Vietnam, and Slovakia form a truly efficient distribution network.

Excellence is our number one priority.

We use the latest technologies to optimize our daily production. Bonfiglioli is fully committed to a more sustainable workplace and supports various local initiatives.

All Bonfiglioli employee pay the utmost attention to even the smallest details, to ensure that our customers receive products with unrivalled quality.

CONFIGURE YOUR PRODUCT ON MOSAICO

Mosaico is Bonfiglioli's e-business platform created to facilitate customers purchases and product configuration. Fully integrated with Bonfiglioli product database, it offers more flexibility to configure a solution and track orders.

SMART PRODUCT CONFIGURATOR > DOWNLOAD TECHNICAL DATA/3D & 2D DRAWINGS > ORDER ENTRY > ORDER MANAGEMENT > ORDER TRACKING >

A complete e-business platform to be the master of your solutions

Mosaico guides customers, distributors and agents through the process of selecting the right product the right product for their specific needs and also gives support for design activities and orders' management. The system greatly accelerates the product selection and ordering process and also guarantees improved security and accuracy.

Thanks to web-based technology, customers can keep in touch with Bonfiglioli's technical service 24 hours a day, 365 days a year, from anywhere around the world. Registered customers have access to constantly updated technical specifications and drawings, specifically created for the exact product designation they need. This service provides users with on-line assistance to support them with:

- Configure Bonfiglioli products
- Download technical datas/drawings in 3D and 2D
- Benefit from Bonfiglioli's help during products' selection

Industry Specific Solutions

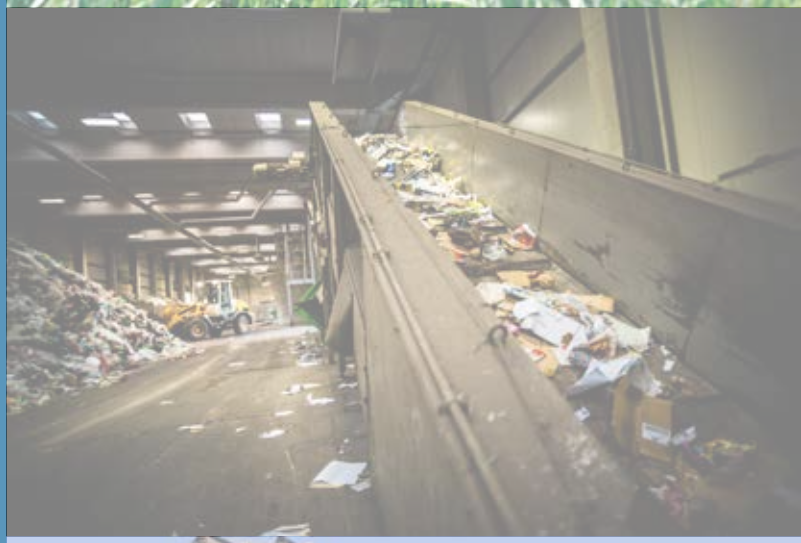

CREATE SOLUTIONS DEDICATE TO DIVERSE INDUSTRIES

Bonfiglioli develops complete industrial solutions that are tailored to meet exact application requirements. Thanks to our decades of experience, we have the specific industry expertise to assist our customers with any kind of projects using tailor-made solutions.

- FOOD, BEVERAGE & TOBACCO
- MATERIAL HANDLING
- MINING
- PACKAGING
- RECYCLING
- SUGAR CANE
- WATER & WASTE WATER TREATMENT
- CONCRETE PROCESSES
- ASPHALT PLANT
- CEMENT PLANT

Other sectors:

- Biogas
- Rubber and plastics
- Metal processing
- Access control
- Commercial HVAC and refrigeration
- Logistics and Stocking systems
- Oil and gas
- Power generation
- Stone, clay and glass

Industrial Gearboxes

HELICAL BEVEL GEARMOTORS & UNITS

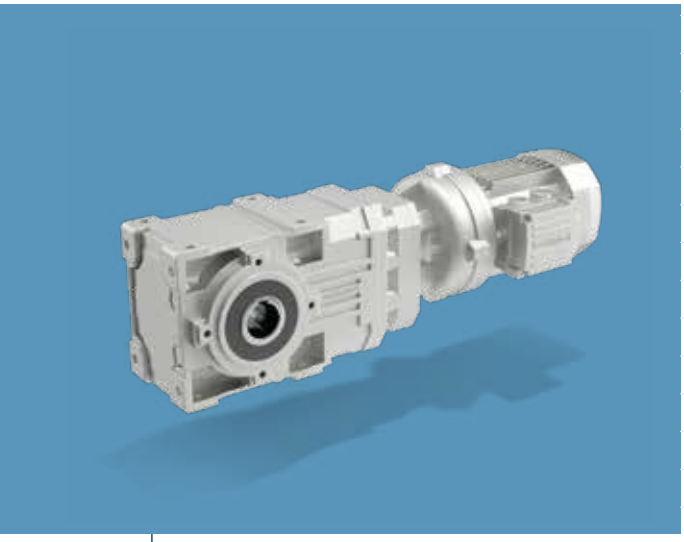

A Series

The A Series combines high efficiency and reliability, low maintenance costs and a wide torque range. The right angle layout between INPUT and OUTPUT makes the A Series particularly compact. The gear set combination makes this right-angle product the most efficient and durable in Bonfiglioli's light- and medium-duty portfolio.

ATEX GEARBOX AVAILABLE

Gear ratios

- 4.9 ... 1,715

Mechanical rating

- 0.22 ...150 kW

Motors

- Input with solid shaft
- Input with e-motor coupling:
  - M, ME, MX (compact asynchronous)
  - BMD (servo permanent magnet)
  - BSR (IEC reluctance)
  - BN, BE, BX (IEC asynchronous)
  - BS (IEC single phase)

Motor options

- Thermistors and thermostat sensors
- Independent forced cooling
- Incremental, sin/cos absolute single/multi-turn encoders
- Tropicalization
- Anti-condensation heaters
- Backstop

Main options

- Surface protection up to C5
- Reinforced bearings
- Reduced backlash
- Torque arm
- Fluoroelastomer oil seals
- Double oil seasonal input
- Taconite seals

Key benefits

- Minimized mounting space
- Reduced installation space and wide output speed selection range
- Reduced standard backlash
- Highly dynamic, energy-saving solution
- Wide output speed selection range
- Gearboxes can operate safely in explosive environments

Key features

- Right-angle input-output
- Compact motor coupling
- Forced gears-shafts coupling
- Servomotor coupling
- Wide ratio range (4 stages)
- Atex - gearbox for explosive environments 2G/2D

Torque (Nm)

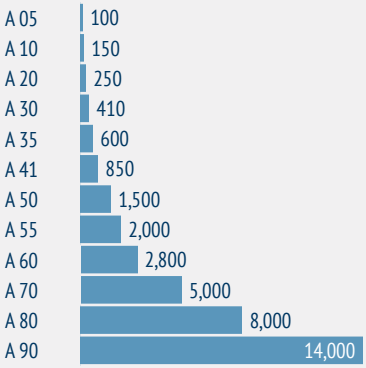

IN-LINE GEARMOTORS & UNITS

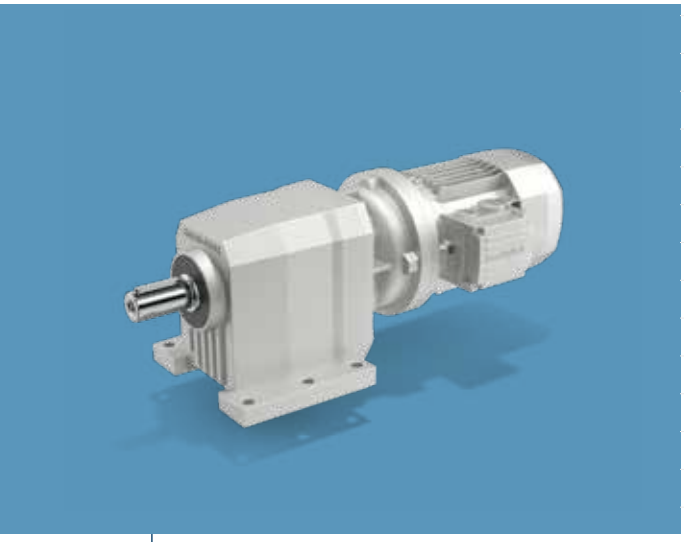

C Series

The C Series is designed for the requirements of standard tasks in the industrial environment. These series achieve first-rate reliability, efficiency, robustness, and a wide output torque range. The extremely wide range of gear ratios, achieved through 2-, 3- or 4-stage versions, allows the customer to adapt the C Series to every application and to find the perfect match for output speed requirements.

ATEX GEARBOX AVAILABLE

Gear ratios

- 2.6 ... 1,481

Mechanical rating

- 0.09 ... 213 kW

Motors

- Input with solid shaft
- Input with e-motor coupling:
  - M, ME, MX (compact asynchronous)
  - BMD (servo permanent magnet)
  - BSR (IEC reluctance)
  - BN, BE, BX (IEC asynchronous)
  - BS (IEC single phase)

Motor options

- Thermistors and thermostat sensors
- Independent forced cooling
- Incremental, sin/cos absolute single/multi-turn encoders
- Tropicalization
- Anti-condensation heaters
- Backstop

Main options

- Surface protection up to C5
- Double oil seals
- Fluor Elastomer Seals
- Reduced Backlash

Key benefits

- Cost-effective solution
- Minimized mounting space
- Easy maintenance
- Operation in a high-temperature environment
- High resistance to external hits
- Pure coaxial torque transmission

Key features

- Space-optimized design
- Compact motor coupling
- Unibox housing
- Forced gear-shafts coupling
- Servomotor coupling
- Wide ratio range (4 stages)
- Atex- gearbox for explosive environments 2G/2D

Torque (Nm)

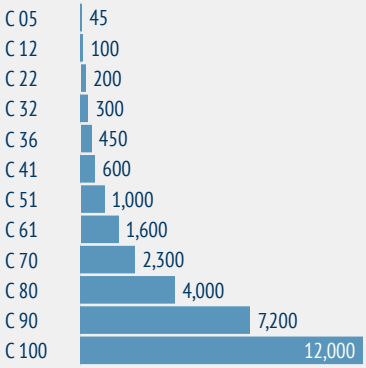

HELICAL PARALLEL-SHAFT GEARMOTORS & UNITS

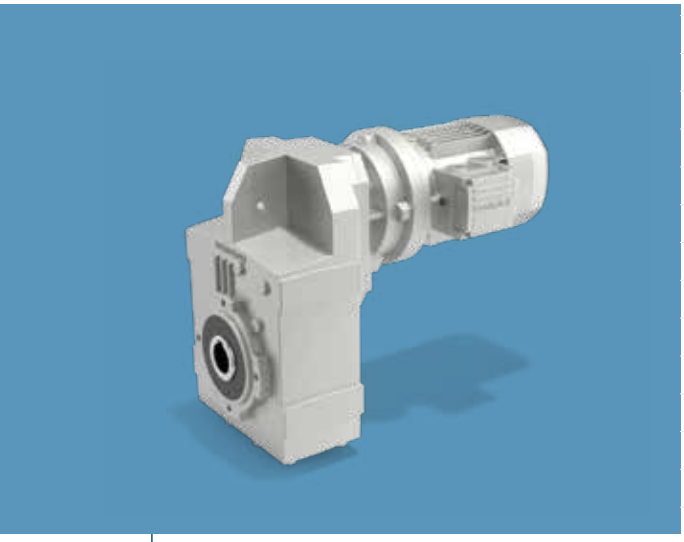

F Series

The F Series is an outstanding solution for customers looking for a drive that can maximize mounting flexibility. Thanks to the housing's lateral holes, the F Series can also be side mounted directly into the machine, in addition to all the conventional mounting positions. This gearmotor guarantees elevated efficiency, reliability and low-noise operation. High torque density, a range of wide gear ratios and a compact design complete the F Series' characteristics.

ATEX GEARBOX AVAILABLE

Gear ratios

- 6.4 ... 2,099

Mechanical rating

- 0.09 ... 123 kW

Motors

- Input with solid shaft
- Input with e-motor coupling:
  - M, ME, MX (compact asynchronous)
  - BMD (servo permanent magnet)
  - BSR (IEC reluctance)
  - BN, BE, BX (IEC asynchronous)
  - BS (IEC single phase)

Motor options

- Thermistors and thermostat sensors
- Independent forced cooling
- Incremental, sin/cos absolute single/multi-turn encoders
- Tropicalization
- Anti-condensation heaters
- Backstop

Main options

- Backstop
- Reduced backlash
- Lateral holes for side mounting
- Torque arm (with anti-vibrating bushings)

Key benefits

- Cost-effective solution
- Minimized mounting space
- Robustness
- Reduced standard backlash
- Highly dynamic, energy-saving solution

Key features

- Lateral holes for side mounting
- Space-optimized design
- Compact motor coupling
- Unibox housing
- Forced gearshaft coupling
- Servomotor coupling
- Wide ratio range (4 Stages)
- Atex - gearbox for explosive environments 2G/2D

Torque (Nm)

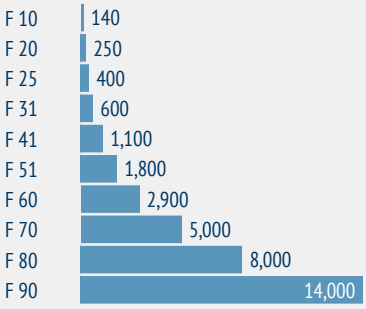

HELICAL SINGLE-STAGE

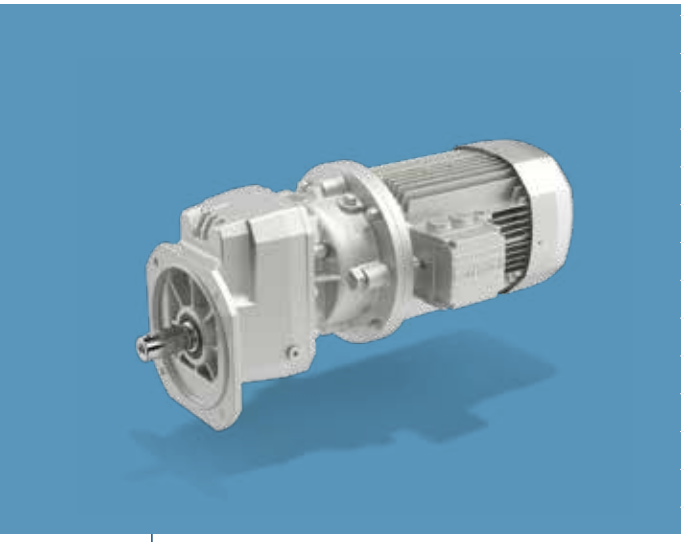

S Series

The S Series design makes this gearmotor particularly effective for pump, fan and blower applications. To meet the needs of customers in these sectors, the S Series is also available in the foot or flange versions and can be completed with a wide range of electric motors entirely manufactured by Bonfiglioli. Asynchronous motors both IEC and compact (B-BE-BX/M-ME-MX), servomotors (BMD) and reluctance motors (BSR) can be coupled with the S Series. With the breadth of its portfolio, Bonfiglioli provides customers with an outstanding balance of efficiency, dynamics and cost effectiveness.

Gear ratios

- 1.4 ... 13.1

Mechanical rating

- 0.09 ... 11.6 kW

Motors

- Input with solid shaft
- Input with e-motor coupling:
  - M, ME, MX (compact asynchronous)
  - BSR (IEC reluctance)
  - BN, BE, BX (IEC asynchronous)
  - BS (IEC single phase)

Motor options

- Thermistors and thermostat sensors
- Independent forced cooling
- Incremental, sin/cos absolute single/multi-turn encoders
- Tropicalization
- Anti-condensation heaters

Main options

- Double oil seals
- Fluoroelastomer seals
- Reduced backlash
- Up to C5 surface protection

Key benefits

- Minimized mounting space
- Robustness
- Reduced standard backlash
- Highly dynamic, energy-saving solution
- Wide output speed selection range
- Gearboxes can operate safely in explosive environments

Key features

- Essential design
- Compact motor coupling
- Unibox housing
- Forced gearshaft coupling
- Servomotor coupling

Torque (Nm)

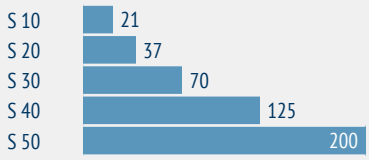

UNIVERSAL WORM GEARMOTORS & UNITS

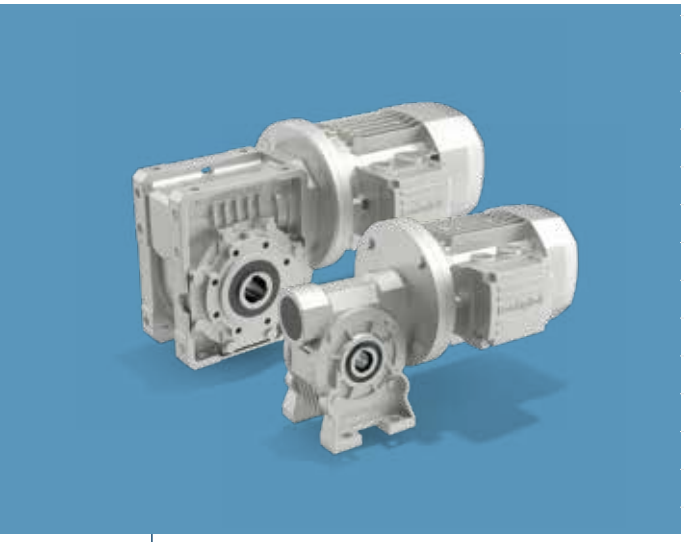

VF/W Series

The VF/W Series succeeds in combining uncompromising quality with state-of-the-art technology and cost-effectiveness. The wide choice of mounting options allows for completely flexible shaft configurations and motor interfaces, all offered as standard. Thanks to several patented manufacturing techniques, Bonfiglioli's VF/W Series stands out for its long operating life and reliability.

ATEX GEARBOX AVAILABLE

Gear ratios

- 7 - 300 ... 2,300

Mechanical rating

- 0.04 ...75 kW

Motors

- Input with solid shaft
- Input with e-motor coupling:
  - M, ME, MX (compact asynchronous)
  - BN, BE, BX (IEC asynchronous)
  - BSR (IEC reluctance)
  - BS (IEC single phase)

Motor options

- Thermistors and thermostat sensors
- Independent forced cooling
- Incremental, sin/cos absolute single/multi-turn encoders
- Tropicalization
- Anti-condensation heaters
- Backstop

Main options

- Up to C5 Surface protection
- Short flange & reinforced bearings
- Torque arm
- Fluoroelastomer oil seals

Key benefits

- Cost-effective solution
- Low noise
- High peak load capacity
- Minimized mounting space
- Long operating life
- High reliability
- Many possible configurations
- Wide output speed/torque selection range
- Reduced installation space and wide output speed selection range

Key features

- Consolidated worm technology
- Compact design
- High quality standards
- Patented manufacturing techniques
- Wide range of options/versions
- Pre-stage version
- Atex - gearbox for explosive environments 2G/2D

Torque (Nm)

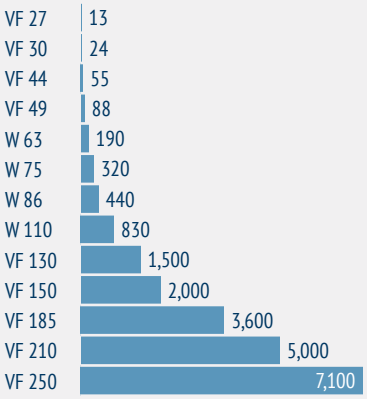

EHNANCED PROTECTION WORM GEARMOTORS & UNITS

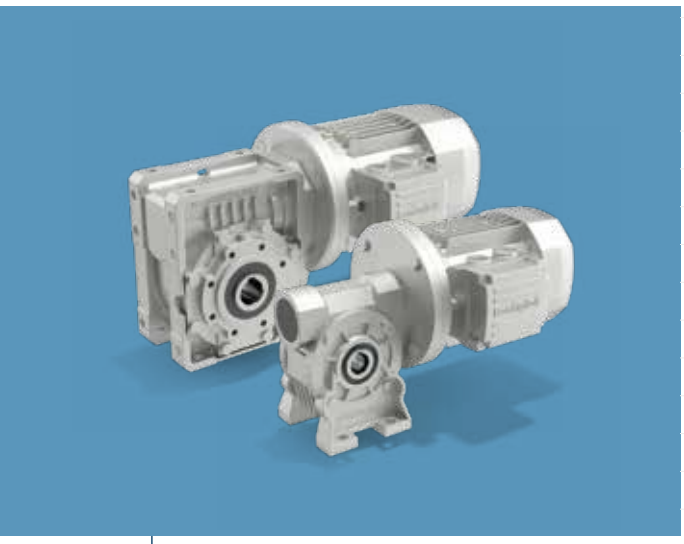

VF/W-EP Series

The VF/W-EP Series is designed to meet the requirements of the food & beverage and pharma & chemical industries and, more generally, to ensure risk-free operation in harsh environments. This version of the gearmotor is manufactured with improved sealing, enhanced corrosion protection and paint suitable for accidental food contact as the standard option. All these features work together to meet the highest hygienic requirements and to greatly increase gearmotor cleanability and operating lifetime in harsh and humid environments.

Gear ratios

- 7 ... 300

Degree of protection

- IP 56 as standard

Mechanical rating

- 0,12 ... 4 kW

Motors

- Input with solid shaft
- Input with e-motor coupling:
  - BN, BE, BX (IEC asynchronous)
  - M, ME, MX (compact asynchronous)

Motor options

- Thermistors and thermostat sensors
- Independent forced cooling
- Incremental, sin/cos absolute single/multi-turn encoders
- Anti-condensation heaters
- Backstop

Main options

- H1 food-grade lubricant
- Wash-down duty double lip oil seals with stainless frame
- Fluoroelastomer rings on output shaft with inner stainless steel loading spring
- FDA and NSF registered paintings for food contact zones
- Up to C5M surface protection

Key benefits

- No dust ingress and protected against water jets
- Minimized environmental contamination
- Mounting flexibility
- Food zone compliant (FDA & NSF)
- Suitable for humid environment
- Anti-rust
- Easy to wash

Key features

- Tropicalized
- Condensation drain holes
- Stainless-steel nameplate & bolts
- Fully sealed gearbox
- Stainless-steel output
- Stainless-steel nameplates and bolts
- Food grade lubricant and coatings
- Special seals
- Pierced gearbox housing

Torque (Nm)

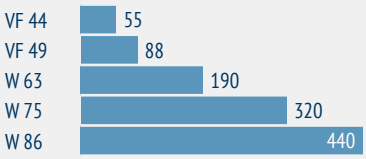

INDUSTRIAL PLANETARY GEARMOTORS & UNITS

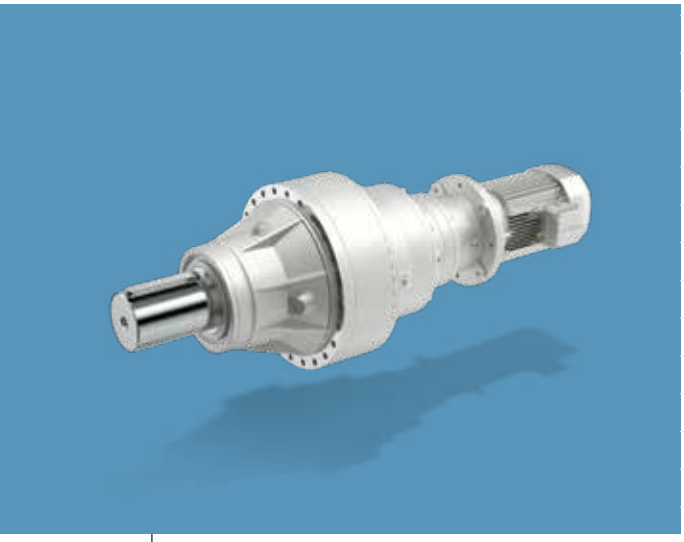

300M Series

Bonfiglioli's 300M Series is an outstanding solution for all heavy-duty applications where compactness is not an option. Thanks to its modular design, the 300M Series can be customized to match an extremely wide range of applications. Bonfiglioli's expertise in planetary technology ensures high-quality product design and manufacturing procedures. The 300 Series operates without unwanted downtime even in the harshest environments. This planetary gearbox achieves top-class flexibility thanks to several outputs, as well as input configurations available for all 20 sizes.

ATEX GEARBOX AVAILABLE

Gear ratios

- 3.4 ... 2,916

Mechanical rating

- up to 1,050 kW

Motors

- Input with solid shaft
- Input with e-motor coupling:
  - M, ME, MX (compact asynchronous)
  - BN, BE, BX (IEC asynchronous)
  - BSR (IEC reluctance)
  - BS (IEC single phase)

Motor options

- Thermistors and thermostat sensors
- Independent forced cooling
- Incremental, sin/cos absolute single/multi-turn encoders
- Tropicalization
- Anti-condensate heaters
- Backstop

Main options

- In line/right angle version
- Independent cooling unit
- Patented integrated cooling solution
- Taconite seals
- ATEX certification for explosive environments

Key benefits

- High torque density
- Extreme speed reduction and high output torque
- Low maintenance cost
- Extremely customizable
- Flexibility
- Usable in explosive environments

Key features

- Highly transmissible torque/weight ratio
- Combined version (HD, A, W/VF series)
- High quality standards
- High shock resistance
- Wide range of options and accessories
- Electric and hydraulic motor compatible
- Built-in cooling fan
- ATEX version 2G/2D

Torque (Nm)

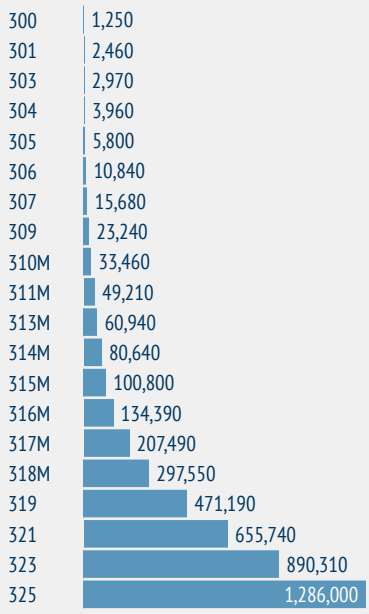

COMBINED PLANETARY/HELICAL BEVEL HEAVY DUTY GEAR UNITS

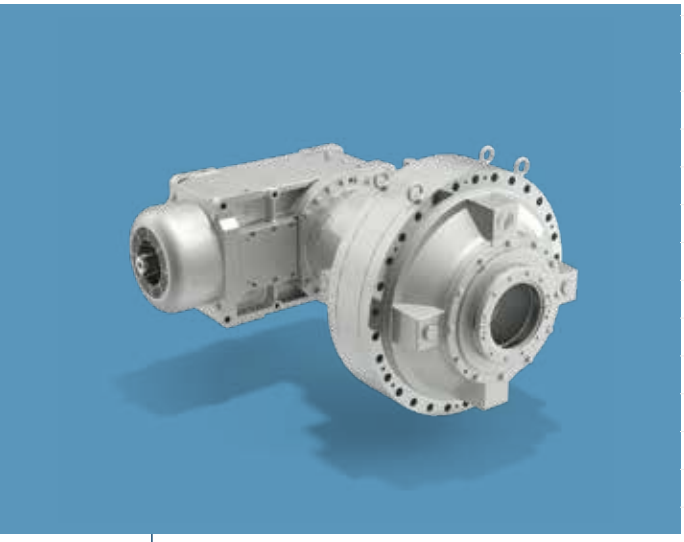

3/H Series

The Bonfiglioli 3/H Series combines the high torque density of planetary gear units with the robustness and high-speed operation of the helical bevel heavy-duty products. This configuration can provide great power transmission in a very compact space, thanks to its angular layout. The 3/H Series can also come with a set of features such as hydraulic couplings or cooling circuits, adapted according to customers' needs.

Gear ratios

- 89.1... 1,070

Mechanical rating

- 0,12 ... 4 kW

Motors

- Input with solid shaft
- Input with e-motor coupling:
  - M, ME, MX (compact asynchronous)
  - BN, BE, BX (IEC asynchronous)
  - BSR (IEC reluctance)
  - BS (IEC single phase)

Motor options

- Thermistors and thermostat sensors
- Independent forced cooling
- Incremental, sin/cos absolute single/multi-turn encoders
- Tropicalization
- Anti-condensation heaters
- Backstop

Main options

- Auxiliary thermal devices
- Forced lubrication
- Backstop devices
- Torque arm
- Base plates
- Fluid couplings
- Shoe brakes

Key benefits

- High continuous transmissible torque and power
- Suitable for all heavy-duty applications
- High shock resistance
- High reliability
- Easy maintenance
- Highly customizable

Key features

- Highest transmissible torque in the Bonfiglioli portfolio
- Designed to ensure the longest service intervals
- Modular design
- Wide range of available options
- Several available cooling systems
- Easy integration with base plates

Torque (Nm)

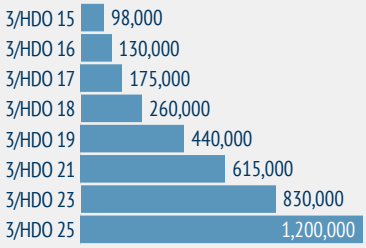

HELICAL BEVEL HEAVY DUTY GEAR UNITS

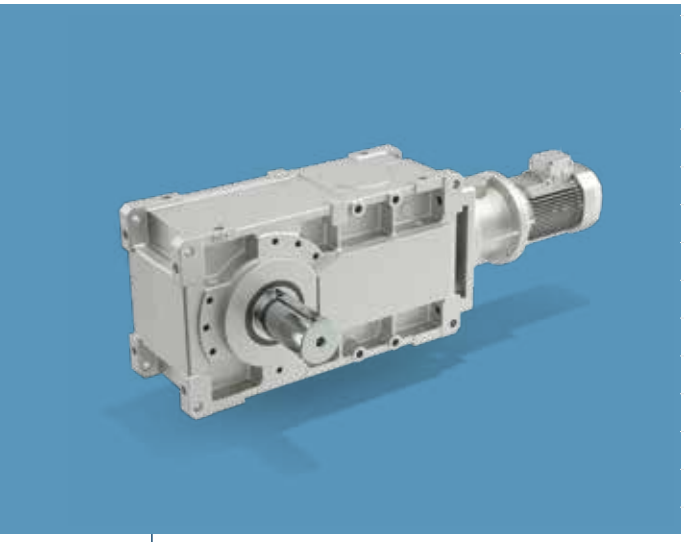

HDO Series

When high torque, robustness, reliability and long-operating life are required, Bonfiglioli's HDO Series is the best possible option. Thanks to high-quality materials and an optimized design, the HD Series can operate in the harshest environments, as well as in explosive atmospheres, with low maintenance costs and long service intervals. The HDO Series can also be fully customized thanks to an extremely broad portfolio of options and accessories.

ATEX GEARBOX AVAILABLE

Gear ratios

- 5.6 ... 490

Motors

- Input with solid shaft
- Input with e-motor coupling:
  - BN, BE, BX (IEC asynchronous)
  - BSR (IEC reluctance)

Motor options

- Thermistors and thermostat sensors
- Independent forced cooling
- Incremental, sin/cos absolute single/multi-turn encoders
- Tropicalization
- Anti-condensation heaters

Main options

- Fan cooling, cooling coil, oil heater
- External cooling unit
- Backstop
- Forced lubrication
- Temperature and oil level sensors
- Drywell
- Taconite seals
- ATEX certification for explosive environments

Key benefits

- Highly transmissible power
- Robustness
- Mounting flexibility
- Reliability
- Usable in explosive environments

Key features

- Spheroidal cast iron housing
- I/O shaft planarity and gearbox symmetry
- Wide range of options and accessories
- High design standards
- Atex - gearbox for explosive environments 2G/2D

Torque (Nm)

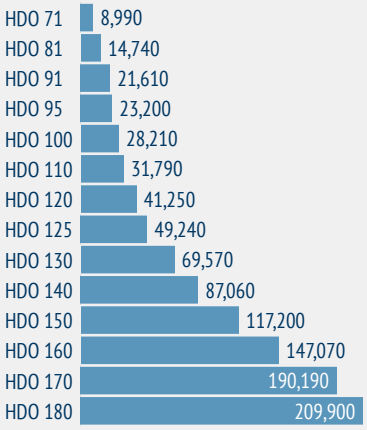

HELICAL PARALLEL SHAFT HEAVY DUTY GEAR UNITS

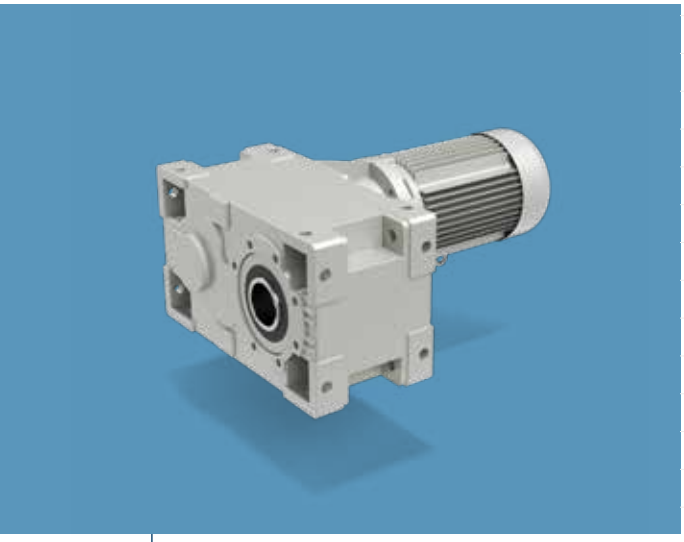

HDP Series

When high torque, robustness, reliability and long-operating life are required, Bonfiglioli's HDP Series is the best possible option. Thanks to high-quality materials and an optimized design, the HD Series can operate in the harshest environments, as well as in explosive atmospheres, with low maintenance costs and long service intervals. The HDP Series can also be fully customized thanks to an extremely broad portfolio of options and accessories.

ATEX GEARBOX AVAILABLE

Gear ratios

- 7.1 ... 500

Motors

- Input with solid shaft
- Input with e-motor coupling:
  - BN, BE, BX (IEC asynchronous)
  - BSR (IEC reluctance)

Motor options

- Thermistors and thermostat sensors
- Independent forced cooling
- Incremental, sin/cos absolute single/multi-turn encoders
- Tropicalization
- Anti-condensation heaters

Main options

- Fan cooling, cooling coil, oil heater
- External cooling unit
- Backstop
- Forced lubrication
- Temperature and oil level sensors
- Drywell
- Taconite seals

Key benefits

- High transmissible power
- Robustness
- Mounting Flexibility
- High customization level
- Reliability

Key features

- Spheroidal Cast Iron Housing
- I/O Shaft planarity and gearbox symmetry
- Wide range of options and accessories
- High standards design
- Atex- gearbox for explosive environments 2G/2D

Torque (Nm)

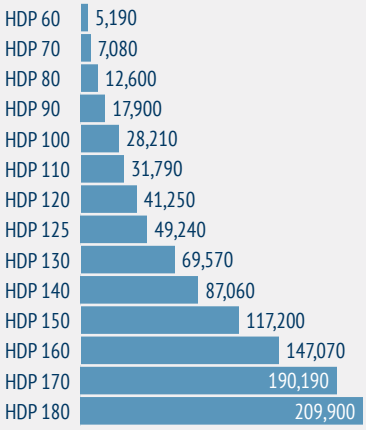

HELICAL PARALLEL SHAFT HEAVY DUTY GEAR UNITS

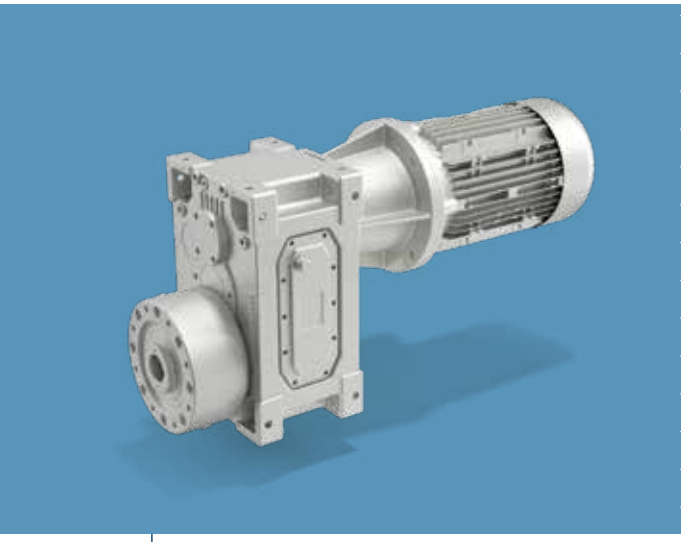

HDPE Series

This product is dedicated to the extruder market and provides high customization of output and gear ratio combinations to fulfill our customers' needs. This gear unit provides a robust nodular cast iron gear case suitable for high loads and specific heavy duty thrust bearing sourced exclusively from primary brands. This solution also allows easy machine integration thanks to a universal mounting gearbox case (customized screw interface can be provided too) and can come with an auxiliary thermal aid device (cooling coil, oil to water heat exchanger), and oil temperature and level sensors to easily monitor its functioning.

Gear ratios

- 7.1 ... 125

Motors

- Input with solid shaft
- Input with e-motor coupling:
  - BN, BE, BX (IEC asynchronous)
  - BSR (IEC reluctance)

Motor options

- Thermistors and thermostat sensors
- Independent forced cooling
- Incremental, sin/cos absolute single/multi-turn encoders
- Tropicalization
- Anti-condensation heaters

Main options

- Auxiliary thermal aid device (cooling coil, oil to water heat exchanger)
- Fluoroelastomer compound oil seals on I/O shaft
- Oil temperature and level sensors

Key benefits

- Easy machine integration thanks to universal mounting gearbox case (customized screw interface can also be provided)
- Suitable for high loads
- Adaptability to customers requirements

Key features

- Dedicated design for single screw extruder drive;
- Robust nodular cast-iron gear case
- Specific heavy duty thrust bearing sourced exclusively from primary brands
- Auxiliary thermal aid device
- Thrust bearing case designed to lodge a wide range of bearings

Torque (Nm)

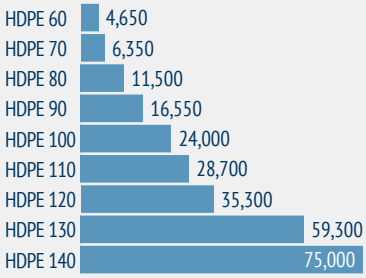

Electric Motors

ASYNCHRONOUS IE1 THREE PHASE MOTOR

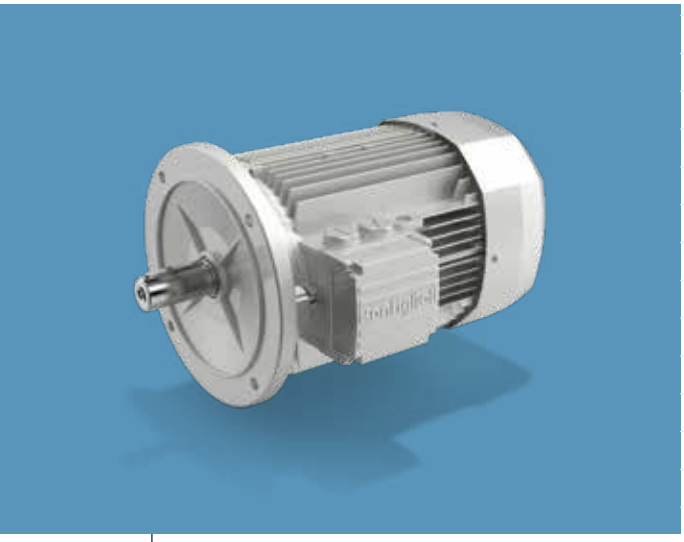

BN/M Series

The IEC-normalized BN motors comply with all the applicable international standards, including the EMC and LV Directives. They are available in the 0.06 - 30 kW range in the foot and the flange mounting version, the latter in both the IM B5 and the IM B14 configuration. Single and multi-speed versions available with generally three brake options offered, one DC and two AC supply, lending further flexibility to the system.
Lastly, all motors are inverter duty.

Degree of protection

- Standard IP55
- Standard for brake motors IP54

Conformity

- Efficiency - IEC 60034-30:2008
- Low Voltage Directive - 2006/95/EC
- Electromagnetic Compatibility Directive - 2006/95/EC

Power supply

- @50 Hz: 230/400, 290/500, 400/690
- @60 Hz: 230/460, 330/575, 265/460, 460/800

Mounting options

- IM B3, IM B5, IM B14

Brake types

- AC & DC brakes

Brake-related options

- Manual release lever
- Soft-start flywheel
- Capacitive filter
- Brake separate power supply
- Brake functionality check (micro-switch)

Motors

- 3 phase asynchronous

Motor options

- Thermistors and thermostat sensors
- Independent forced cooling
- Incremental, sin/cos absolute single/multi-turn encoders
- Tropicalization
- Anti-condensate heaters
- Up to IP65 protection

Key benefits

- Reduced operating cost
- Energy saving
- Compliant with all the MEPS
- Complete solution (gearbox and motor)
- Control flexibility
- Flexibility
- Global motor

Key features

- Compact version
- Inverter duty ready
- Multiple-speed motors
- Certified motor (DOE, NRCan, CCC, etc.)

Power (kW)

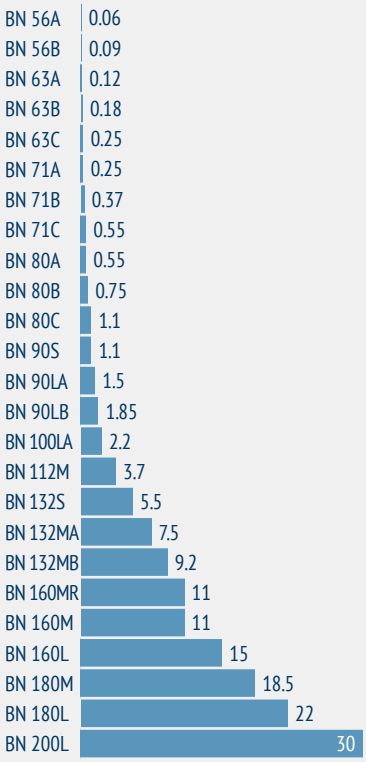

ASYNCHRONOUS IE2 THREE PHASE MOTOR

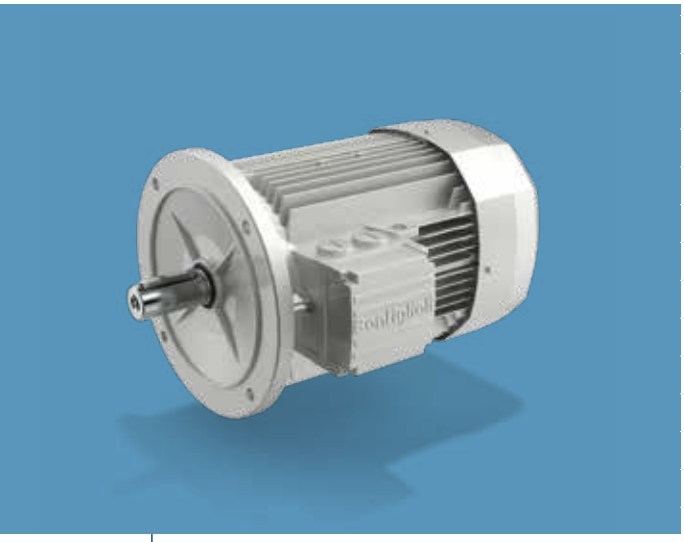

BE/ME Series

The IEC-normalized BE motors comply with IEC 60034-30:2008 (efficiency classes) and all the applicable international standards, including the EMC and LV Directives.
They are available in the 0.75 - 22 kW range in the foot and the flange mounting version, the latter in both the IM B5 and the IM B14 configuration.
Lastly, all motors are inverter duty.

Degree of protection

- Standard IP55

Conformity

- Efficiency - IEC 60034-30:2008
- Low Voltage Directive - 2006/95/EC
- Electromagnetic Compatibility Directive - 2006/95/EC

Power supply

- @50 Hz: 230/400, 290/500, 400/690
- @60 Hz: 230/460, 330/575, 265/460, 460/800

Mounting options

- IM B3, IM B5, IM B14

Motors

- 3 phase asynchronous

Motor options

- Thermistors and thermostat sensors
- Independent forced cooling
- Incremental, sin/cos absolute single/multi-turn encoders
- Tropicalization
- Anti-condensate heaters
- Up to IP65 protection

Key benefits

- Reduced operating cost
- Energy saving
- Compliant to all the MEPS
- Complete (Gearbox + Motor) Solution
- Control flexibility
- Global motor (can be utilized in most of the markets)

Key features

- Compact version
- Inverter duty ready
- Multiple speeds motors
- Certified motor (DOE, NRCan, CCC...)

Power (kW)

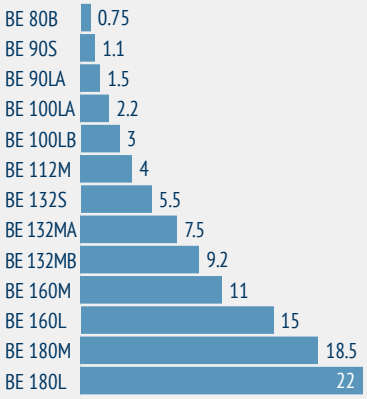

ASYNCHRONOUS IE3 THREE PHASE MOTOR

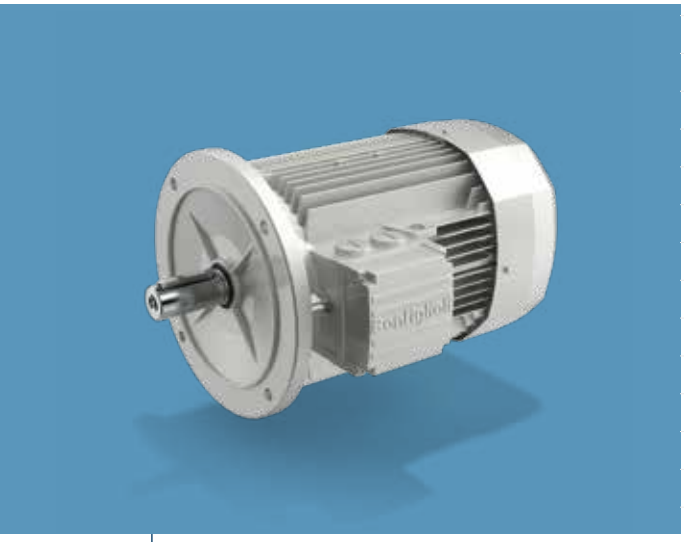

BX/MX Series

The release of the new BX/MX motors is a further expression of our regard for the environment.
The BX/MX motors fulfil IE3 efficiency class requirements, according to the international standard IEC 60034-30.
The "X" of the new BX/MX motors stands for "excellence" in efficiency, being IE3 the top efficiency rating currently formalized by global standards.
Lastly, all motors are inverter duty and generally 3 brakes options are offered.

Degree of protection

- Standard IP55
- Standard for brake motors IP54

Conformity

- Efficiency - IEC 60034-30:2008
- Low Voltage Directive - 2006/95/EC
- Electromagnetic Compatibility Directive - 2006/95/EC

Power supply

- @50 Hz: 230/400, 290/500, 400/690
- @60 Hz: 230/460, 330/575, 265/460, 460/800

Mounting options

- IM B3, IM B5, IM B14

Brake types

- AC & DC brakes

Brake-related options

- Manual release lever
- Soft-start flywheel
- Capacitive filter
- Brake separate power supply
- Brake functionality check (micro-switch)

Motors

- 3 phase asynchronous

Motor options

- Thermistors and thermostat sensors
- Independent forced cooling
- Incremental, sin/cos absolute single/multi-turn encoders
- Tropicalization
- Anti-condensate heaters
- Up to IP65 protection

Power (kW)

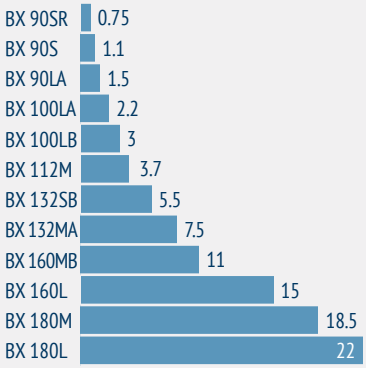

ASYNCHRONOUS IE3 THREE PHASE MOTOR

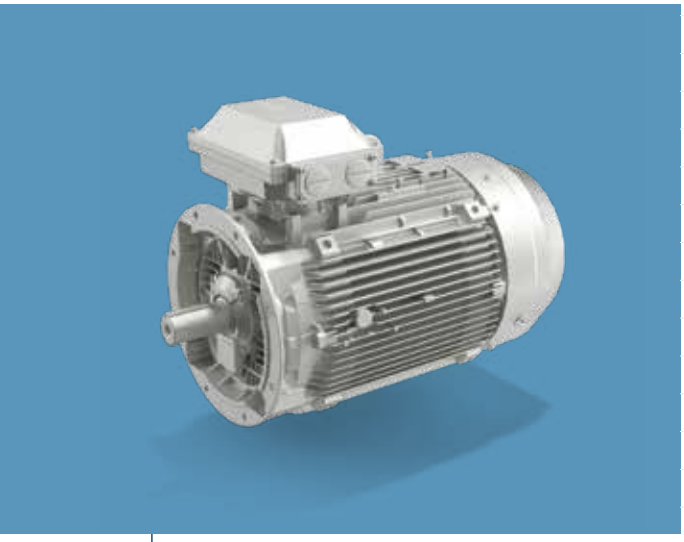

BX Heavy Duty Series

BX Heavy Duty asynchronous motors are manufactured to exceed the requirements of the most demanding industrial applications. Bonfiglioli Heavy Duty Asynchronous motors, indeed, comes with a best in class set of features: cast iron frame, C3 corrosion protection, regreasable bearings, and Shock Pulse Measurement predisposition as standard on all sizes, are only few of the characteristics that makes these motors the most suitable also in the harshest enviroments.

Degree of protection

- Standard IP55 also for Brakemotors

Conformity

- Efficiency - IEC 60034-30:2008
- Low Voltage Directive - 2006/95/EC
- Electromegnetic Compatibility Directive - 2006/95/EC

Power supply

- @50 Hz: 400/690, 380/660
- @60 Hz: 460, 440/760

Mounting options

- IM B3, IM B5, IM B35

Certifications

- CE, CEL, UL, NBR, EECA

Motors

- 3 phase asynchronous

Motor options

- Thermistors and thermostat sensors
- Indipendent forced cooling
- Heavy Duty Encoders
- Tropicalization
- Anti-Condensate Heaters
- Up to IP56 protection

Key benefits

- Robustness
- Long lifetime
- Wide power range
- Energy saving
- Compliant to all the MEPS
- Complete (Gearbox+Motor) Solution
- Control flexibility
- Global motor (can be utilized in most of the markets)

Key features

- Cast Iron Housing
- Inverter duty ready
- SPM Measurement
- Predisposition
- Certified motor (DOE, NRCan, CCC...)

Power (kW)

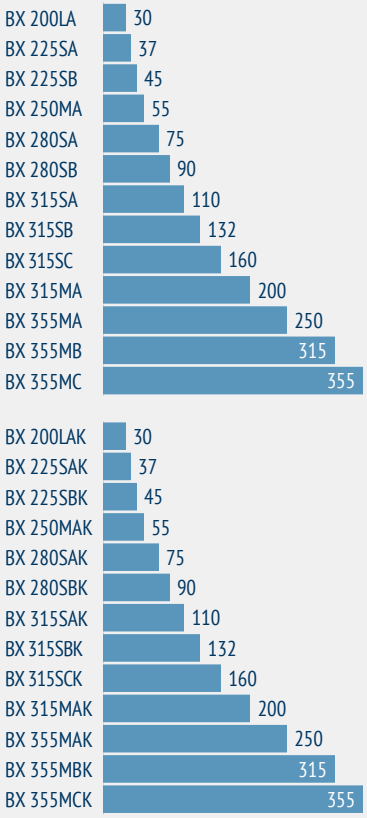

SYNCHRONOUS RELUCTANCE MOTOR

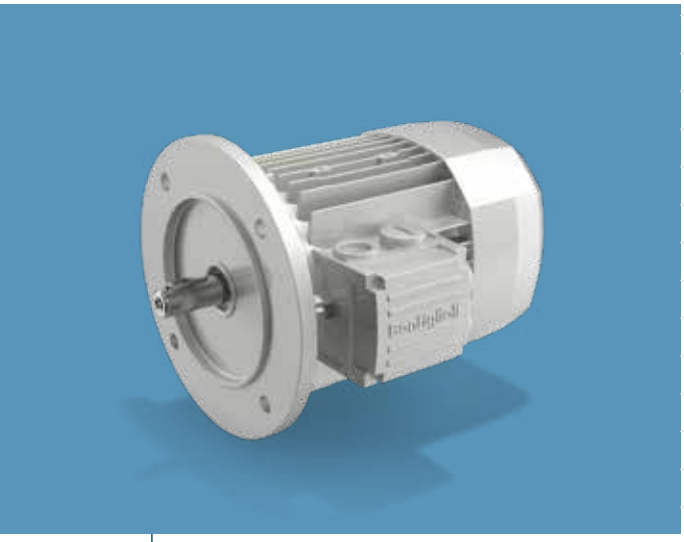

BSR Series

The reluctance motor guarantees a sustainable ecological solution which decreases the total environmental impacl thanks to the absence of magnets and increased efficiency. Reduced operating costs allow a fast return. This product benefits from the proven simplicity and reliability of induction motors and the higher efficiency of synchronous motors.

Sizes

- High efficiency package 71C ... 132 MB
- High output package 71C ... 132 MB

Rated motor power

- High efficiency package 0.37 ... 9.2 kW
- High output package 0.55 ... 18.5 kW

Power supply

- 400 Vac

Degree of protection

- Standard IP55
- IP56 (optional)

Motor mounting

- B3; B5; B14

Main options

- Thermal protection
- Silicon sensor KTY 84-130
- Thermistor PTC 150
- Platinum sensor PT1000
- Forced ventilation
- Power supply 1 phase 230V (frame 71-100) 3-400V Y (frame 112-132)
- Double extended shaft
- External mechanical protection
- Rotor balancing grade B

Key features

- Highly accurate sensorless control technology
- Compact, economical & eco-friendly
- High dynamic response
- Energy savings
- High reliability
- High performance solution

Both Bonfiglioli packages are IES2 according to the International Efficiency of Systems (IES) classification for the drive and motor combination (IEC 61800-9-2).

OUR GLOBAL PRESENCE

Thanks to an international network of branches and closely interconnected production plants, we can guarantee the same high standards of Bonfiglioli quality anywhere at any given time. We know that our direct presence in local markets is the key to long-lasting success, so our family includes 23 sales branches, 15 production facilities and more than 550 distributors around the world.

Our organization is always close by, offering complete and efficient solutions and supporting our customers with dedicated services, co-engineering and after-sales assistance.

15
PLANTS

23
BRANCHES

80
COUNTRIES

550
DISTRIBUTORS

~4.000
PEOPLE

BR_CAT_D&P_STD_ENG_R02_1

AUSTRALIA
Bonfiglioli Transmission (Aust.) Pty Ltd
2, Cox Place Glendenning NSW 2761
Locked Bag 1000 Plumpton NSW 2761
Tel. +61 2 8811 8000

BRAZIL
Bonfiglioli Redutores do Brasil Ltda
Travessa Cláudio Armando 171 - Bloco 3
CEP 09861-730 - Bairro Assunção
São Bernardo do Campo - São Paulo
Tel. +55 11 4344 2322

CHINA
Bonfiglioli Drives (Shanghai) Co. Ltd.
#68, Hui-Lian Road, QingPu District,
201707 Shanghai
Tel. +86 21 6700 2000

#568, Longpan Road, Jiading District,
201707 Shanghai

Bonfiglioli Trading (Shanghai) Co. Ltd.
Room 423, 4th Floor, #38, Yinglun Road,
China (Shanghai) Pilot Free Trade Zone,
Shanghai

FRANCE
Bonfiglioli Transmission s.a.
14 Rue Eugène Pottier
Zone Industrielle de Moimont II
95670 Marly la Ville
Tel. +33 1 34474510

GERMANY
Bonfiglioli Deutschland GmbH
Sperberweg 12 - 41468 Neuss
Tel. +49 0 2131 2988 0

Bonfiglioli Vectron GmbH
Europark Fichtenhain B6 - 47807 Krefeld
Tel. +49 0 2151 8396 0

O&K Antriebstechnik GmbH
Ruhrallee 8-12 - 45525 Hattingen
Tel. +49 0 2324 2050 1

PRODUCTION
ASSEMBLY
SALES
SERVICE

INDIA
Bonfiglioli Transmission Pvt. Ltd.
Mobility & Wind Industries
AC 7 - AC 11 Sidco Industrial Estate
Thirumudivakkam Chennai - 600 044
Tel. +91 844 844 8649

Discrete Manufacturing & Process Industries - Motion & Robotics
Survey No. 528/1,
Perambakkam High Road Mannur Village,
Sriperumbudur Taluk Chennai - 602 105
Tel. +91 844 844 8649

Discrete Manufacturing & Process Industries
Plot No.A-9/5, Phase IV MIDC Chakan,
Village Nighoje Pune - 410 501
Tel. +91 844 844 8649

ITALY
Bonfiglioli Riduttori S.p.A.
Discrete Manufacturing & Process Industries
Via Cav. Clementino Bonfiglioli, 1
40012 Calderara di Reno
Tel. +39 051 6473111

Discrete Manufacturing & Process Industries
Via Sandro Pertini, lotto 7b
20080 Carpiano
Tel. +39 02985081

Discrete Manufacturing & Process Industries
Via Saliceto, 15 - 40010 Bentivoglio

Mobility & Wind Industries
Via Enrico Mattei, 12 Z.I. Villa Selva
47122 Forlì
Tel. +39 0543 789111

Motion & Robotics
Via Unione, 49 - 38068 Rovereto
Tel. +39 0464 443435/36

NEW ZEALAND
Bonfiglioli Transmission (Aust.) Pty Ltd
88 Hastie Avenue, Mangere Bridge,
2022 Auckland
PO Box 11795, Ellerslie
Tel. +64 09 634 6441

SINGAPORE
Bonfiglioli South East Asia Pte Ltd
8 Boon Lay Way, #04-09,
8@ Tadehub 21, Singapore 609964
Tel. +65 6268 9869

SLOVAKIA
Bonfiglioli Slovakia s.r.o.
Robotnícka 2129
Považská Bystrica, 01701 Slovakia
Tel. +421 42 430 75 64

SOUTH AFRICA
Bonfiglioli South Africa Pty Ltd.
55 Galaxy Avenue, Linbro Business Park,
Sandton, Johannesburg
2090 South Africa
Tel. +27 11 608 2030

SPAIN
Tecnotrans Bonfiglioli S.A
Pol. Ind. Zona Franca, Sector C,
Calle F, n° 6 - 08040 Barcelona
Tel. +34 93 447 84 00

TURKEY
Bonfiglioli Turkey Jsc
Atatürk Organize Sanayi Bölgesi,
10007 Sk. No. 30
Atatürk Organize Sanayi Bölgesi,
35620 Çiğli - Izmir
Tel. +90 0 232 328 22 77

UNITED KINGDOM
Bonfiglioli UK Ltd.
Unit 1 Calver Quay, Calver Road, Winwick
Warrington, Cheshire - WA2 8UD
Tel. +44 1925 852667

USA
Bonfiglioli USA Inc.
3541 Hargrave Drive
Hebron, Kentucky 41048
Tel. +1 859 334 3333

VIETNAM
Bonfiglioli Vietnam Ltd.
Lot C-9D-CN My Phuoc Industrial Park 3
Ben Cat - Binh Duong Province
Tel. +84 650 3577411

We have a relentless commitment to excellence, innovation & sustainability. Our team creates, distributes and services world-class power transmission & drive solutions to keep the world in motion.

HEADQUARTERS

Bonfiglioli S.p.A
Registered office: Via Cav. Clementino Bonfiglioli, 1
40012 Calderara di Reno - Bologna (Italy)
Tel. +39 051 6473111

Head office: Via Isonzo, 65/67/69
40033 Casalecchio di Reno - Bologna (Italy)