Cooling Fans

Cross Flow Fans

	Page
Introduction	E-122
MF Series	E-124
MFD Series	E-128

AC Input
MF Series

DC Input
MFD Series

RoHS RoHS-Compliant

Cross Flow Fans

●Additional Information●
Technical reference ➜ Page F-1

Cross flow fans are suitable for cooling circuit boards or other applications requiring wide and uniform air flow such as air curtains.

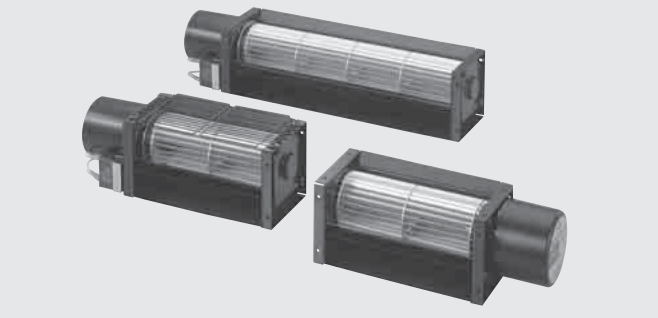

Features

Cross flow fans deliver wide, uniform air flow.
These fans provide right-angle air flow and a rectangular shape, allowing for installation in corners and space saving.

Types of Cross Flow Fans

●: Standard Type ■: Alarm Type ◆: Pulse Sensor Type

Series	Features	Power Supply Voltage	Impeller Length [mm (in.)] 300 (11.81)	Impeller Length [mm (in.)] 150 (5.91)
AC Cross Flow Fans **MF** Series ➜ Page E-124～E-127	●AC input cross flow fans ●The **MF** Series is recognized by UL/CSA Standards. CE Marking is used in accordance with the Low Voltage Directive. (Certification status differs according to the product.) ●RoHS-Compliant The **MF** Series conforms to the RoHS Directive that prohibits the use of six chemical substances including lead and cadmium.	Single-Phase 100/110/115 VAC	●	●
		Single-Phase 200/220/230 VAC	●	●
DC Cross Flow Fans **MFD** Series ➜ Page E-128～E-131	●DC input cross flow fans ●RoHS-Compliant The **MFD** Series conforms to the RoHS Directive that prohibits the use of six chemical substances including lead and cadmium.	24 VDC	●■	●■
		48 VDC	●◆	●◆

●Details of safety standards ➜ Page G-2 ●List of safety standard approved products (Model, Standards, File No., Certification Body) ➜ Page G-11

System Configuration

An example of a system configuration with the **MF** Series.

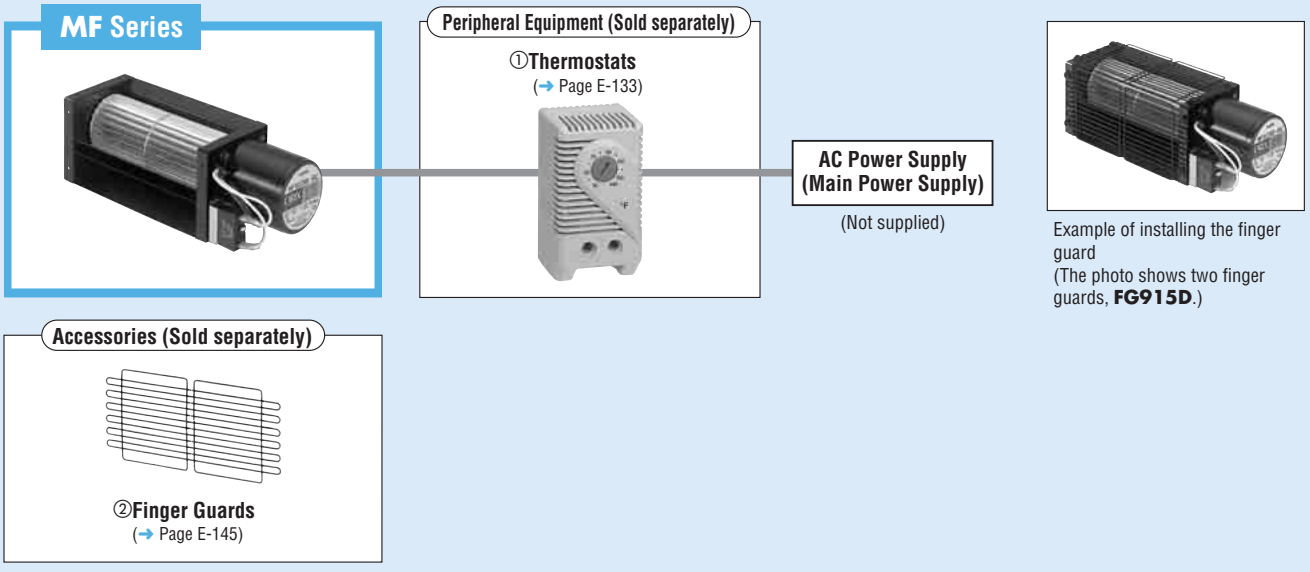

Example of installing the finger guard
(The photo shows two finger guards, **FG915D**.)

No.	Product Name	Overview	Page
①	Thermostats	Contact is ON and OFF in accordance with thermostat's set temperature. Using a fan with a thermostat provides on/off control of the fan.	E-133
②	Finger Guards	This guard prevents fingers and foreign objects from entering the rotating side of the fan.	E-145

●Example of System Configuration

Fan		(Sold separately) Thermostat	Finger Guard (one)
MF915-BC	+	AM1-WA1	FG915D

● The system configuration shown above is an example. Other combinations are available.

Product Number Code

AC Cross Flow Fans

MF 9 30 B - B C

① ② ③ ④ ⑤ ⑥

①	Series	**MF**: **MF** Series
②	Frame Size	**9**: 90 mm (3.54 in.)
③	Impeller Length	**30**: 300 mm (11.81 in.) **15**: 150 mm (5.91 in.)
④	Letter Designation	Blank: Motor is on left when viewing the mounting holes **B**: Motor is on right when viewing the mounting holes
⑤	Power Supply Voltage	**B**: Single-Phase 100/110/115 VAC **D**: Single-Phase 200/220/230 VAC
⑥		**C**: Built-in Capacitor

DC Cross Flow Fans

MFD 9 30 B - 24 A

① ② ③ ④ ⑤ ⑥

①	Series	**MFD**: **MFD** Series
②	Frame Size	**9**: 90 mm (3.54 in.)
③	Impeller Length	**30**: 300 mm (11.81 in.) **15**: 150 mm (5.91 in.)
④	Letter Designation	Blank: Motor is on left when viewing the mounting holes **B**: Motor is on right when viewing the mounting holes
⑤	Power Supply Voltage	**24**: 24 VDC **48**: 48 VDC
⑥	Additional Functions	**A**: Low-Speed Alarm, Contact Alarm Type **S**: Pulse Sensor Type

General Specifications

Item	Specifications
Insulation Resistance	100 MΩ or more when 500 VDC megger is applied between the windings and the frame after continuous operation under normal ambient temperature and humidity. (**MFD** Series: 10 MΩ or more, 250 VDC megger, **MFD915-48**, **24A**, **48S**, **MFD930-48**, **24A**, **48S**: 10 MΩ or more, 500 VDC megger)
Dielectric Strength	Sufficient to withstand 1.5 kVAC at 50 Hz applied between the windings and the frame for 1 minute after continuous operation under normal ambient temperature and humidity. (**MFD** Series: 500 VAC at 50 Hz, 1 minute)
Temperature Rise	45ºC (81ºF) or less measured by the thermometer method after the temperature of the motor case has stabilized after continuous operation under normal ambient temperature and humidity. (**MFD** Series: 15ºC [27ºF] or less)
Operating Voltage Range	**MF** Series: ±10% of the rated voltage **MFD** Series: ±10% of the rated voltage
Insulation Class	**MF** Series; UL, CSA: Class A [105˚C (221˚F)], Class E [120˚C (248˚F)] **MFD** Series; Class E [120˚C (248˚F)]
Overheat Protection	**MF** series has built-in thermal protector (automatic return type). Open: 120±5ºC (248±9ºF), Close: 77±15ºC (170.6±27ºF) **MFD** series has an overheat protection circuit.
Ambient Temperature	−10～+60ºC (+14～+140ºF)
Ambient Humidity	85% or less (non-condensing)
Color	**MF** Series; Motor: Dark gray, Fan case: Black **MFD** Series; Motor: Black, Fan case: Black, Flange: Dark gray
Materials	Impeller: Aluminum Casing: Steel Motor case: Die cast aluminum

Comparison of Characteristics

MF Series

• 50 Hz

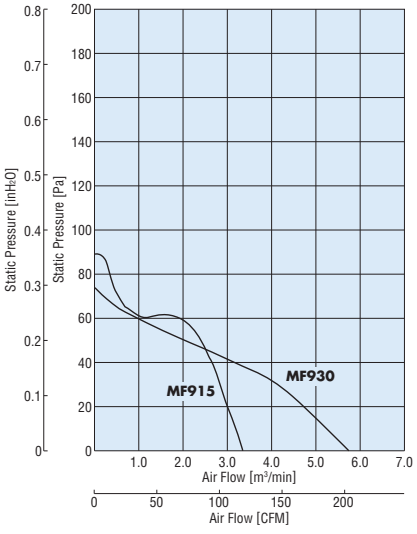

• 60 Hz

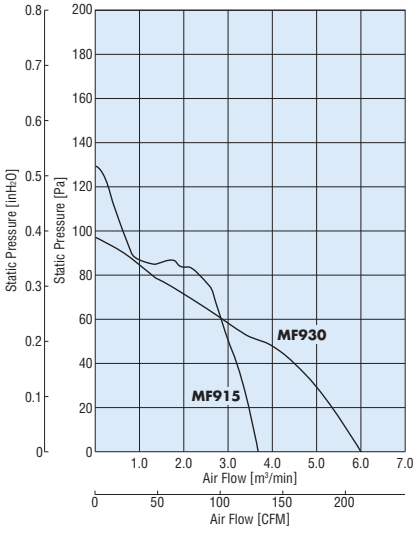

MFD Series

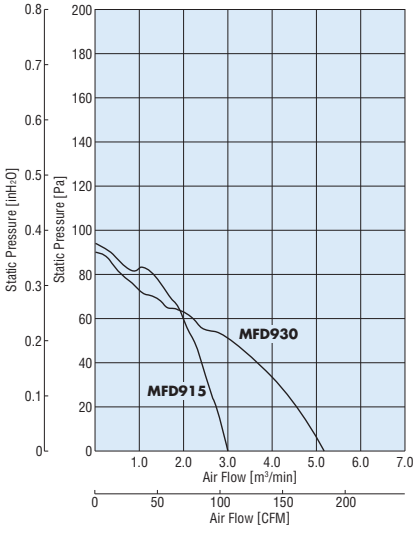

AC Cross Flow Fans
MF Series
Impeller Length 300 mm (11.81 in.)

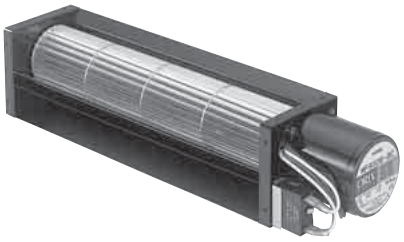

Ambient Temperature: −10～+60°C (+14～+140°F)
Operating Voltage Range: ±10%
Materials
- Motor Case: Die Cast Aluminum
- Casing: Steel
- Impeller: Aluminum

Overheat Protection: Built-in Thermal Protector
Bearings: Ball Bearings

Specifications (RoHS)

Model	Voltage VAC	Frequency Hz	Current A	Input W	Speed r/min	Max. Air Flow m^3/min	Max. Air Flow CFM	Max. Static Pressure Pa	Max. Static Pressure inH_2O	Noise Level dB (A)
MF930-BC **MF930B-BC**	Single-Phase 100	50	0.40	35	2500	6.0	212	74	0.297	58
	Single-Phase 100	60	0.50	45	2700	6.2	219	103	0.413	60
	Single-Phase 110	60	0.50	48	2950	6.6	233	106	0.425	62
	Single-Phase 115	60	0.50	50	3000	6.8	240	106	0.425	63
MF930-DC **MF930B-DC**	Single-Phase 200	50	0.20	35	2500	6.0	212	74	0.297	58
	Single-Phase 200	60	0.25	45	2700	6.2	219	103	0.413	60
	Single-Phase 220	60	0.25	48	2950	6.6	233	106	0.425	62
	Single-Phase 230	50	0.20	40	2700	6.2	219	78	0.313	60
	Single-Phase 230	60	0.25	50	3000	6.8	240	106	0.425	63

● How to read specifications ➜ Page E-19 ● Details of safety standards ➜ Page G-2 ● Details of RoHS Directive ➜ Page G-38

The following items are included in each product.
Fan, Operating Manual

Air Flow – Static Pressure Characteristics

● How to read air flow – static pressure characteristics ➜ Page E-20

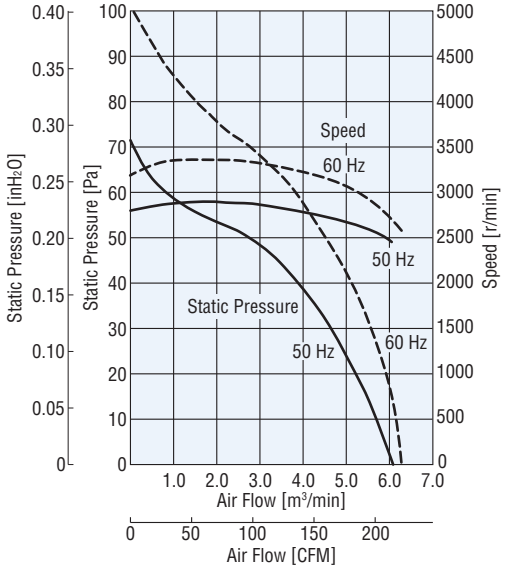

Features E-122 / System Configuration E-122 / General Specifications E-123

Dimensions Unit = mm (in.)

●MF930-BC, MF930-DC

Mass: 1.9 kg (4.2 lb.)

DXF E034

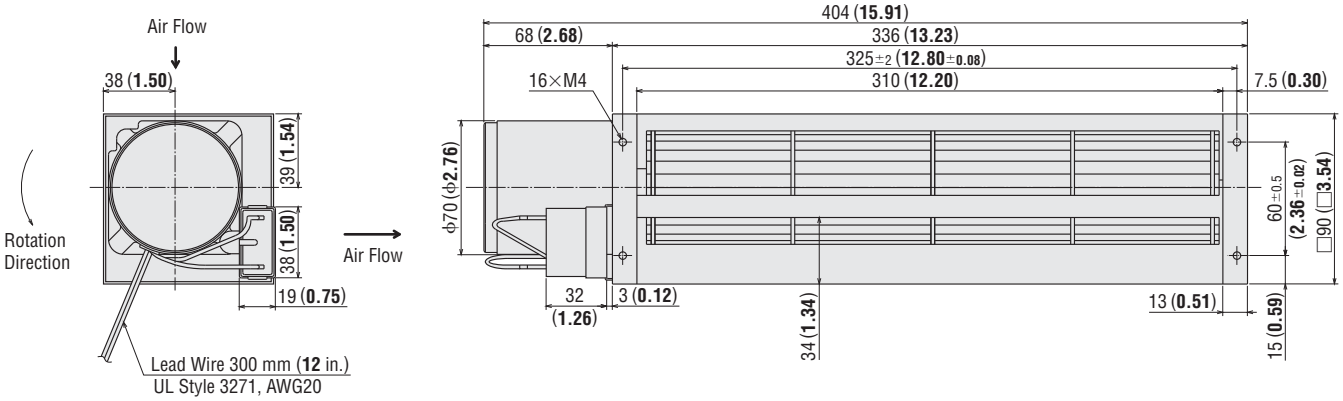

●MF930B-BC, MF930B-DC

Mass: 1.9 kg (4.2 lb.)

DXF E035

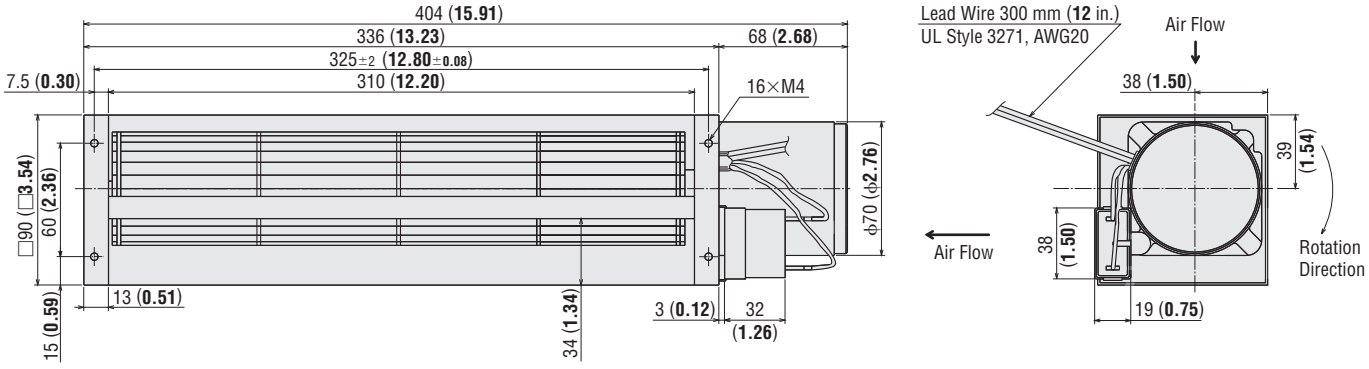

Panel Cut-Out Unit = mm (in.)

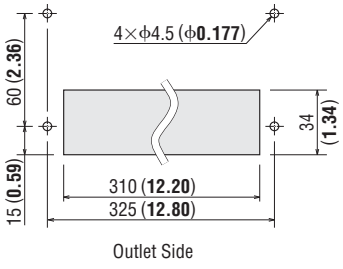

Connection Diagram

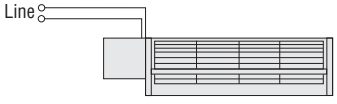

Accessories

The following product is RoHS-Compliant.

Details ➜ Page E-137

Product	Model	Safety Standards	Page
Finger Guard	**FG930D**	Conformed component	E-145

Thermostats

A thermostat makes it possible for fans to operate only when cooling is necessary, thereby conserving energy.

RoHS

Thermostats **AM1-WA1/AM1-XA1**

●Page ➜ E-133

AC Cross Flow Fans
MF Series
Impeller Length 150 mm (5.91 in.)

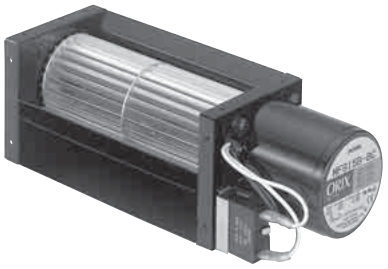

Ambient Temperature: −10～+60°C (+14～+140°F)
Operating Voltage Range: ±10%
Materials
Motor Case: Die Cast Aluminum
Casing: Steel
Impeller: Aluminum
Overheat Protection: Built-in Thermal Protector
Bearings: Ball Bearings

Specifications RoHS

Model	Voltage VAC	Frequency Hz	Current A	Input W	Speed r/min	Max. Air Flow m^3/min	Max. Air Flow CFM	Max. Static Pressure Pa	Max. Static Pressure inH_2O	Noise Level dB (A)
MF915-BC MF915B-BC	Single-Phase 100	50	0.35	30	2650	3.4	120	88	0.353	60
	Single-Phase 100	60	0.45	40	2950	3.7	131	127	0.509	63
	Single-Phase 110	60	0.45	42	3200	4.0	141	132	0.529	64
	Single-Phase 115	60	0.45	43	3250	4.1	145	132	0.529	64
MF915-DC MF915B-DC	Single-Phase 200	50	0.20	30	2650	3.4	120	88	0.353	60
	Single-Phase 200	60	0.25	40	2950	3.7	131	127	0.509	63
	Single-Phase 220	60	0.25	42	3200	4.0	141	132	0.529	64
	Single-Phase 230	50	0.20	33	2800	3.6	127	92	0.369	61
	Single-Phase 230	60	0.25	43	3250	4.1	145	132	0.529	64

● How to read specifications ➜ Page E-19 ●Details of safety standards ➜ Page G-2 ●Details of RoHS Directive ➜ Page G-38

The following items are included in each product.
Fan, Operating Manual

Air Flow – Static Pressure Characteristics

● How to read air flow – static pressure characteristics ➜ Page E-20

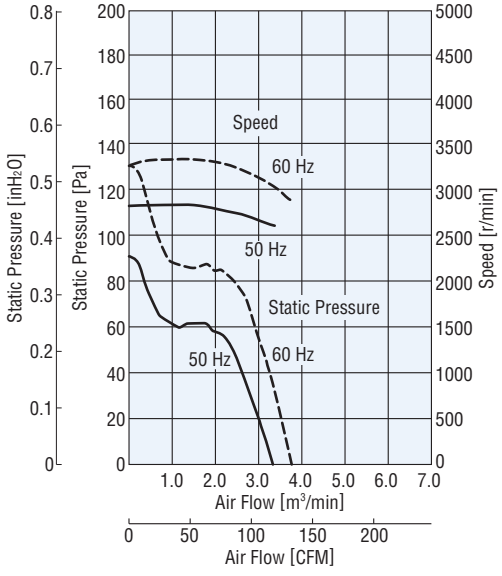

Features E-122 / System Configuration E-122 / General Specifications E-123

Dimensions Unit = mm (in.)

●MF915-BC, MF915-DC

Mass: 1.7 kg (3.7 lb.)

DXF E036

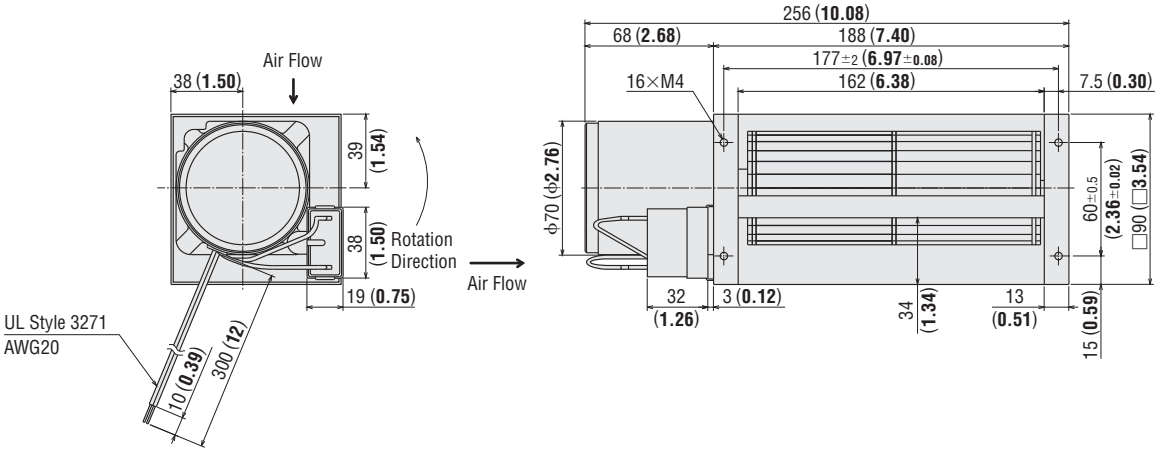

●MF915B-BC, MF915B-DC

Mass: 1.7 kg (3.7 lb.)

DXF E037

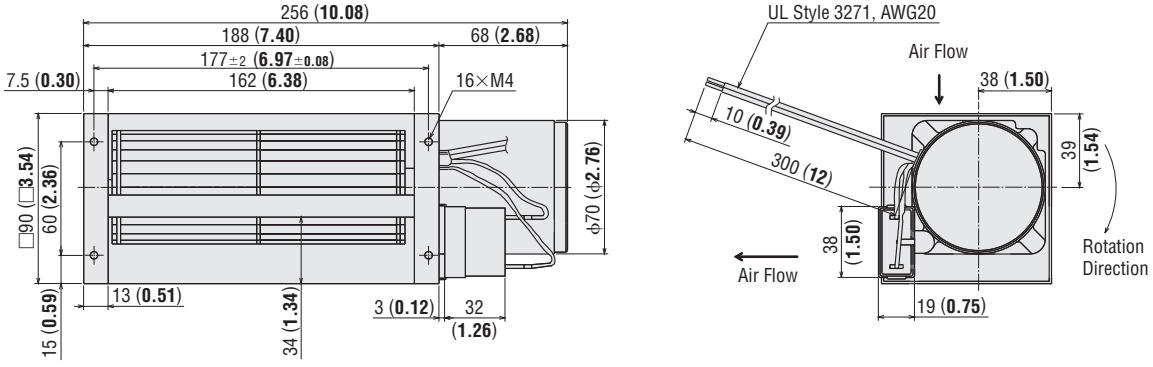

Panel Cut-Out Unit = mm (in.)

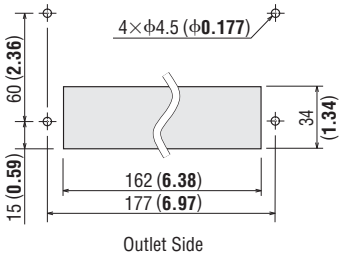

Connection Diagram

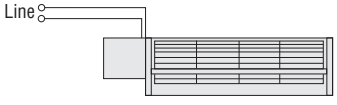

Accessories

The following product is RoHS-Compliant.

Details ➜ Page E-137

Product	Model	Safety Standards	Page
Finger Guard	**FG915D**	Conformed component	E-145

Thermostats

A thermostat makes it possible for fans to operate only when cooling is necessary, thereby conserving energy.

RoHS

Thermostats **AM1-WA1/AM1-XA1**

●Page ➜ E-133

DC Cross Flow Fans
MFD Series
Impeller Length 300 mm (11.81 in.)

Ambient Temperature: −10～+60°C (+14～+140°F)
Operating Voltage Range: ±10%
Materials
Motor Case: Die Cast Aluminum
Casing: Steel
Impeller: Aluminum
Overheat Protection: Built-in Overheat Protection Circuit
Bearings: Ball Bearings

Specifications RoHS

Model		Voltage VDC	Current A	Speed r/min	Max. Air Flow m^3/min	Max. Air Flow CFM	Max. Static Pressure Pa	Max. Static Pressure inH_2O	Noise Level dB (A)
Low-Speed Alarm, Contact Alarm Type (Alarm specifications: ⑦)	**MFD930-24A**	24	1.0	2100	5.2	184	83	0.333	60
	MFD930B-24A								
Pulse Sensor Type (Alarm specifications: ⑨)	**MFD930-48S**	48	0.7	2100	5.2	184	83	0.333	60
	MFD930B-48S								
Standard Type	**MFD930-24**	24	1.0	2100	5.2	184	83	0.333	60
	MFD930B-24								
	MFD930-48	48	0.7	2100	5.2	184	83	0.333	60
	MFD930B-48								

● How to read specifications ➜ Page E-19 ● Alarm specifications ⑦, ⑨ ➜ Page E-21 ● Details of RoHS Directive ➜ Page G-38

The following items are included in each product.
Fan, Operating Manual

Air Flow – Static Pressure Characteristics

● How to read air flow – static pressure characteristics ➜ Page E-20

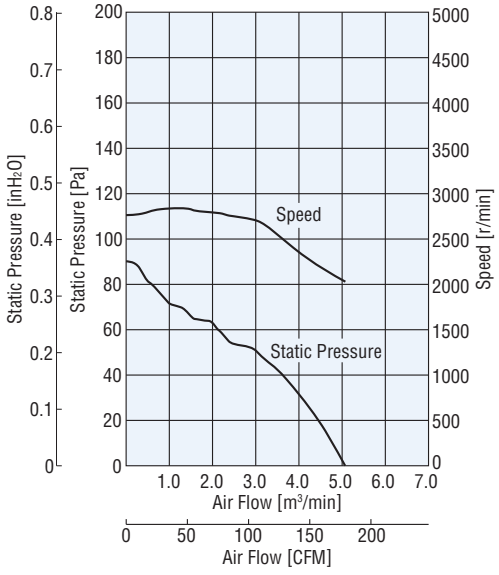

Features E-122 / System Configuration E-122 / General Specifications E-123

Dimensions Unit = mm (in.)

●MFD930

Mass: 1.6 kg (3.5 lb.)

DXF E038

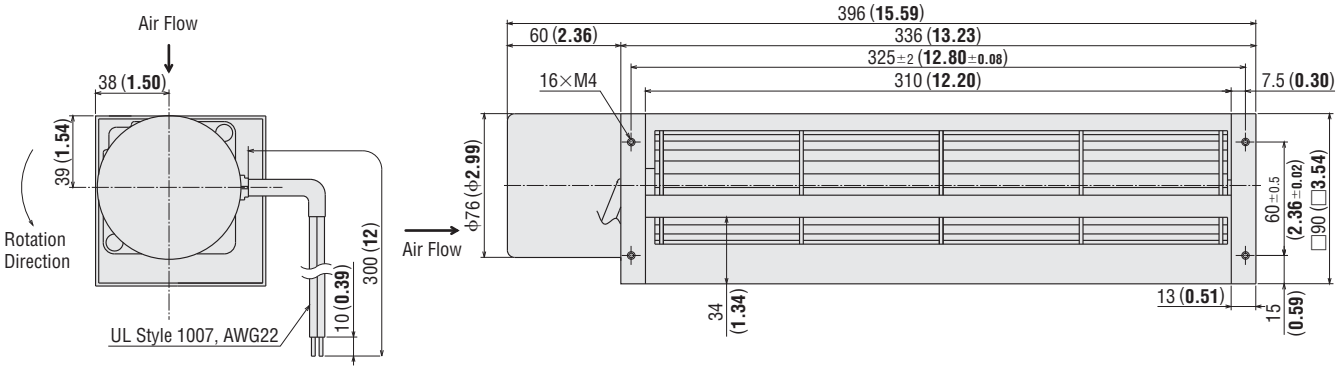

●MFD930B

Mass: 1.6 kg (3.5 lb.)

DXF E039

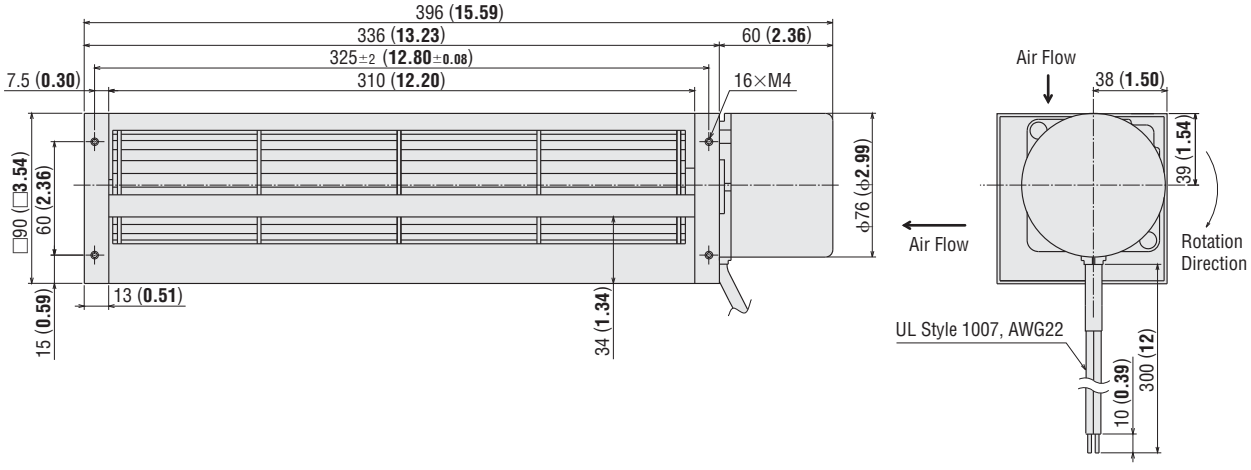

Panel Cut-Out Unit = mm (in.)

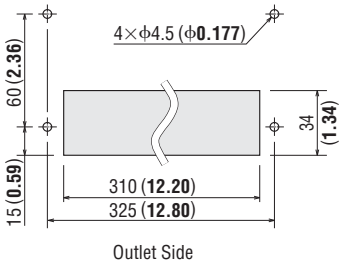

Accessories

The following product is RoHS-Compliant.

Details ➜ Page E-137

Product	Model	Safety Standards	Page
Finger Guard	**FG930D**	Conformed component	E-145

Connection Diagrams

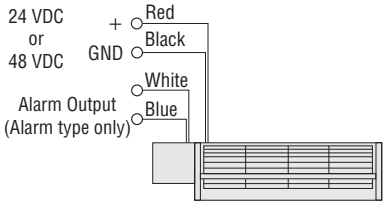

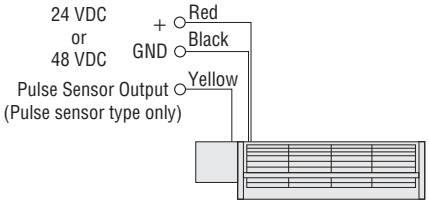

DC Cross Flow Fans
MFD Series
Impeller Length 150 mm (5.91 in.)

Ambient Temperature: −10～+60°C (+14～+140°F)
Operating Voltage Range: ±10%
Materials
Motor Case: Die Cast Aluminum
Casing: Steel
Impeller: Aluminum
Overheat Protection: Built-in Overheat Protection Circuit
Bearings: Ball Bearings

Specifications RoHS

Model		Voltage VDC	Current A	Speed r/min	Max. Air Flow m^3/min	Max. Air Flow CFM	Max. Static Pressure Pa	Max. Static Pressure inH_2O	Noise Level dB (A)
Low-Speed Alarm, Contact Alarm Type (Alarm specifications: ⑦)	**MFD915-24A**	24	1.0	2500	3.0	106	98	0.393	60
	MFD915B-24A								
Pulse Sensor Type (Alarm specifications: ⑨)	**MFD915-48S**	48	0.7	2500	3.0	106	98	0.393	60
	MFD915B-48S								
Standard Type	**MFD915-24**	24	1.0	2500	3.0	106	98	0.393	60
	MFD915B-24								
	MFD915-48	48	0.7	2500	3.0	106	98	0.393	60
	MFD915B-48								

● How to read specifications ➜ Page E-19 ● Alarm specifications ⑦, ⑨ ➜ Page E-21 ● Details of RoHS Directive ➜ Page G-38

The following items are included in each product.
Fan, Operating Manual

Air Flow – Static Pressure Characteristics

● How to read air flow – static pressure characteristics ➜ Page E-20

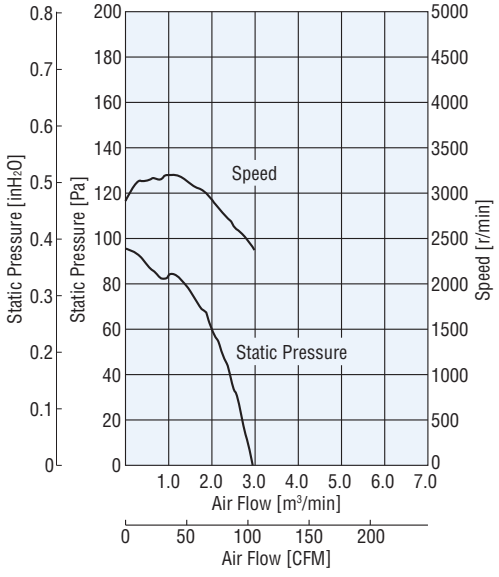

Features E-122 / System Configuration E-122 / General Specifications E-123

Dimensions Unit = mm (in.)

●MFD915

Mass: 1.4 kg (3.1 lb.)

DXF E040

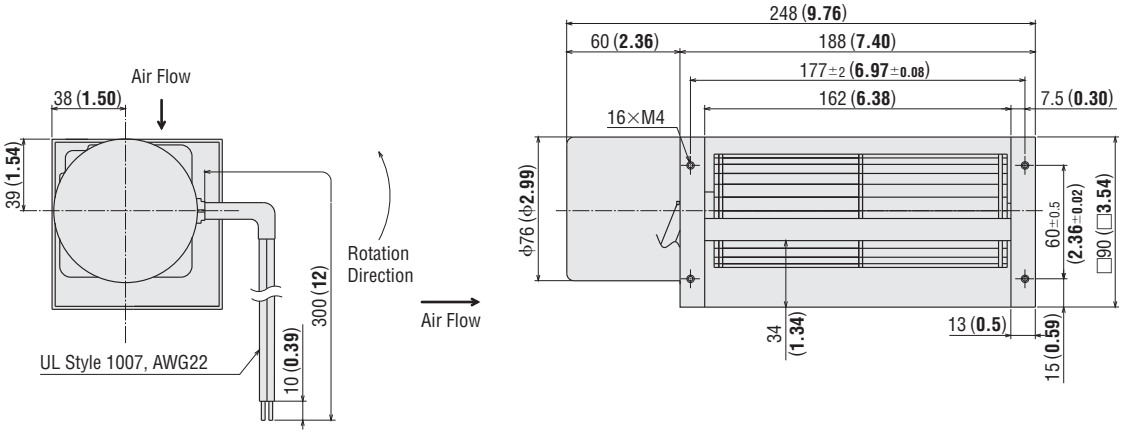

●MFD915B

Mass: 1.4 kg (3.1 lb.)

DXF E041

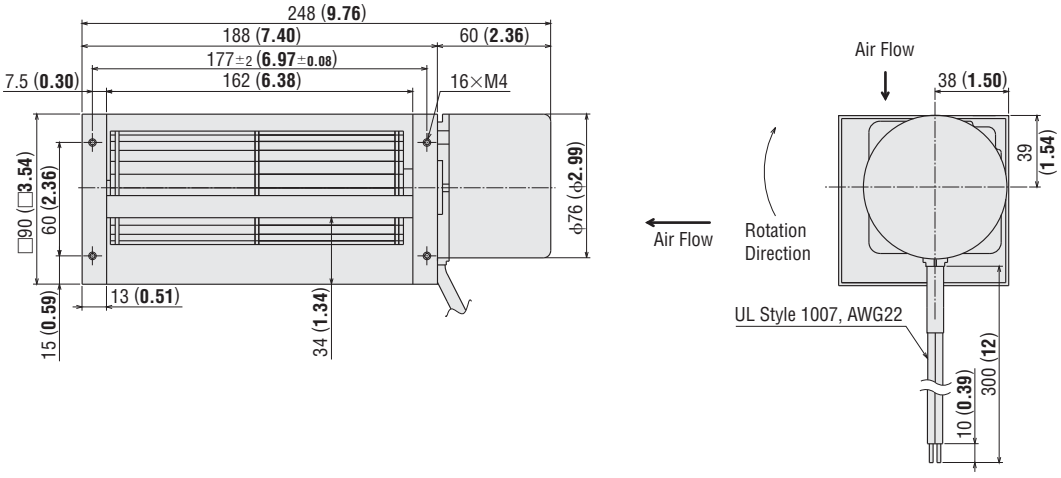

Panel Cut-Out Unit = mm (in.)

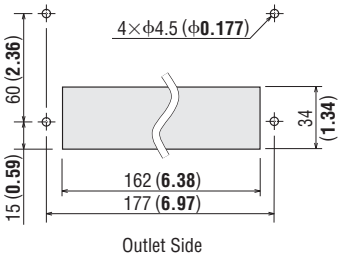

Accessories

The following product is RoHS-Compliant.

Details ➜ Page E-137

Product	Model	Safety Standards	Page
Finger Guard	**FG915D**	Conformed component	E-145
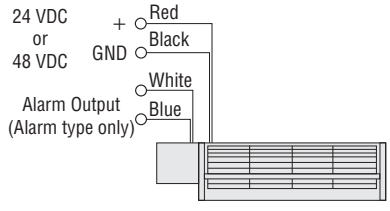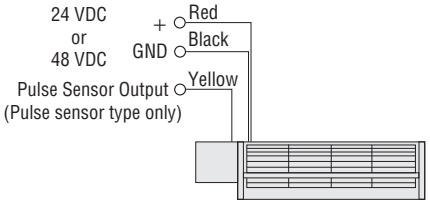
Connection Diagrams